120Fan installed

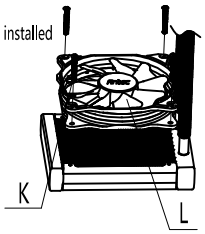

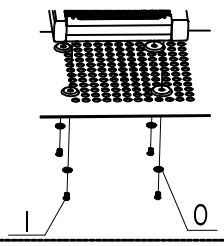

* Not the RGB motherboard connection

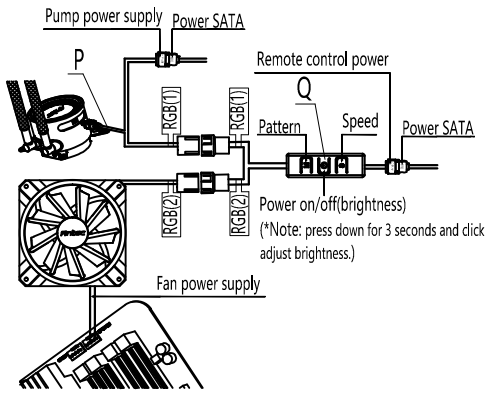

* The RGB motherboard connection

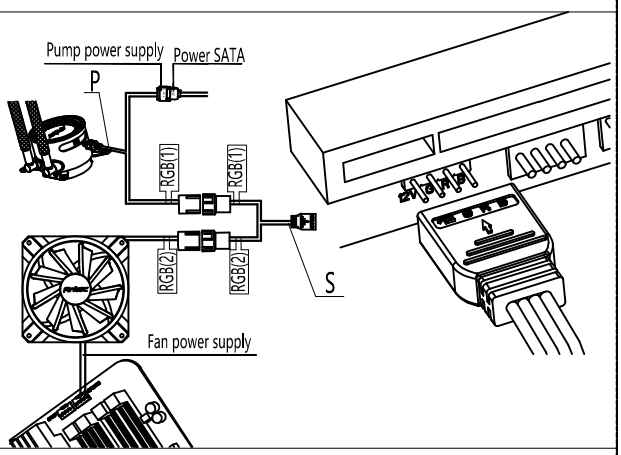

240Fan installed

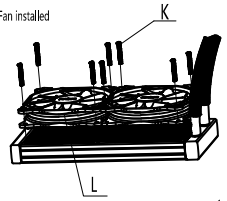

1

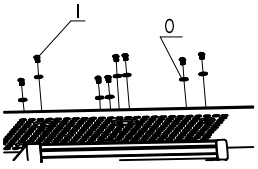

2

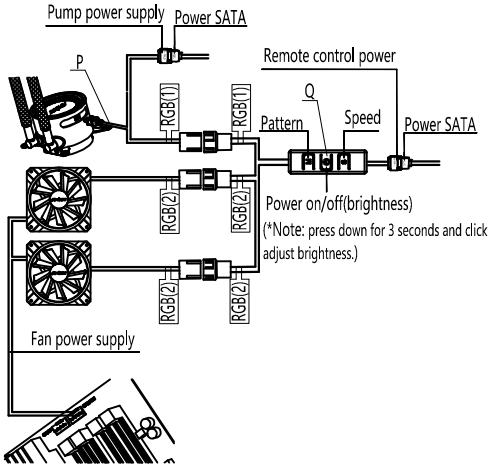

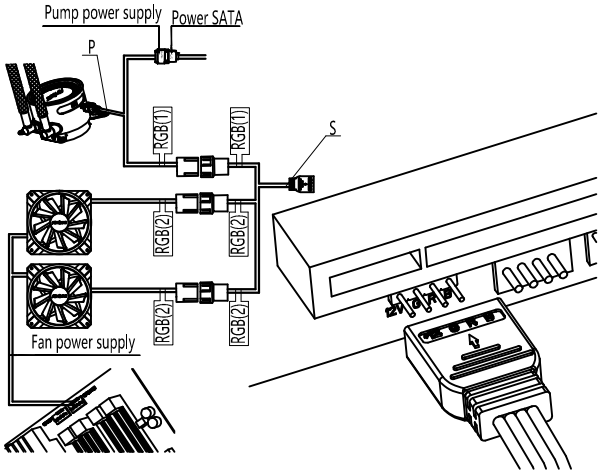

360Fan installed

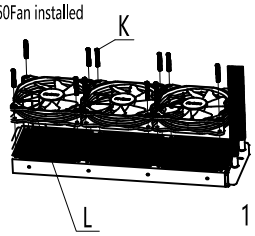

1

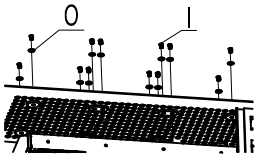
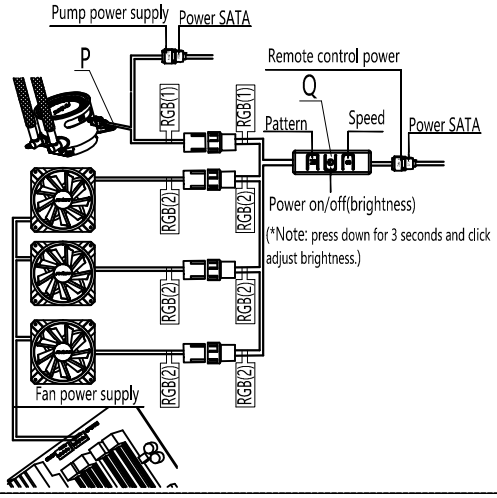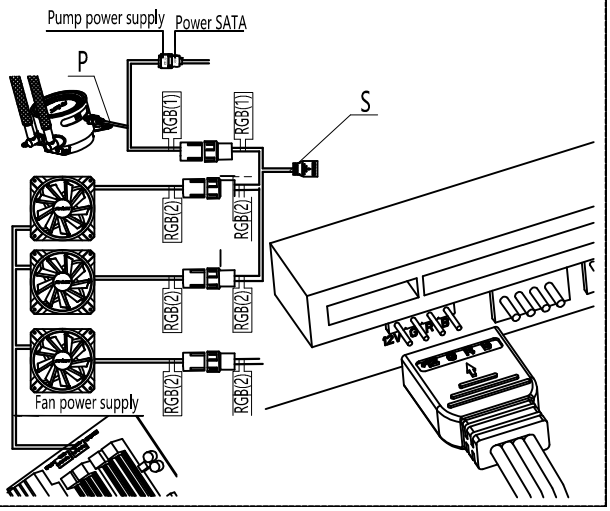
2